QUANTIFI PHOTONICS®
A Teradyne Company

TRAY

SERIES

Passive Component Organizer

PXIE USER MANUAL

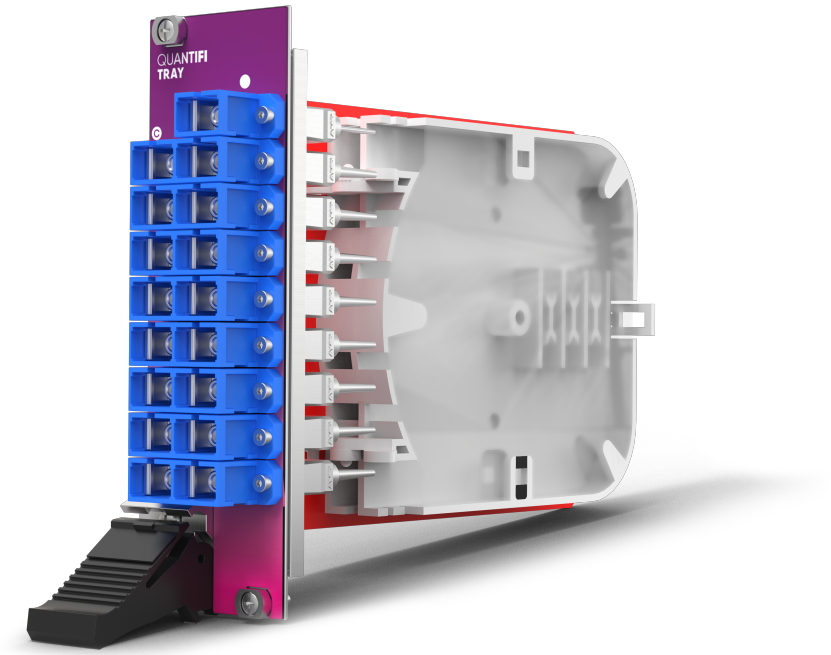

quantifiphotonics.com

Copyright © 2026 Quantifi Photonics Ltd All rights reserved.

No part of this publication may be reproduced, stored in a retrieval system or transmitted in any form, be it electronically, mechanically, or by any other means such as photocopying, recording or otherwise, without the prior written permission of Quantifi Photonics Ltd (Quantifi Photonics).

Information provided by Quantifi Photonics is believed to be accurate and reliable.
However, no responsibility is assumed by Quantifi Photonics for its use nor for any infringements of patents or other rights of third parties that may result from its use. No license is granted by implication or otherwise under any patent rights of Quantifi Photonics.

The information contained in this publication is subject to change without notice.

Trademarks

Quantifi Photonics' trademarks have been identified as such. However, the presence or absence of such identification does not affect the legal status of any trademark. All third party product and company names are trademarks™ or registered® trademarks of their respective holders. Neither Quantifi Photonics nor any software programs or other goods or services offered by Quantifi Photonics are affiliated with, endorsed by, or sponsored by the third parties listed below.

LabVIEW™ is a trademark of National Instruments. MATLAB® is a trademark of The MathWorks Inc. Python® is a trademark of the Python Software Foundation. Microsoft Edge®, and Microsoft Windows® are trademarks of the Microsoft Corporation. Google Chrome™ is a trademark of Google LLC.

Units of Measurement

Units of measurement in this publication conform to SI standards and practices.

CE mark related enquiries

EU Authorized Representative
Certification Company
Veluwezoom 42
1327 AH ALMERE
The Netherlands
+31 (0)36 202 40 37
info@certification-company.com

Manufacturer information

Quantifi Photonics Limited
12-14 Parkway Drive
Rosedale, Auckland 0632
New Zealand

User manual version: 1.10

Table of contents

2 Conventions 4

3 Introducing the TRAY 5

3.1 Environmental conditions 6

4 Operating the TRAY 7

5 Setting up hardware 8

5.1 Install the module in a PXIe chassis 9

5.2 Uninstall the module from a PXIe chassis 10

6 Working with optical fibers 11

7 System requirements 13

8 Maintenance 14

8.1 Annual calibration schedule 14

9 Technical Support 15

9.1 Contacting the Technical Support Group 15

9.2 Transportation 15

10 Warranty Information 16

10.1 General information 16

10.2 Liability 16

10.3 Exclusions 16

10.4 Certification 17

10.5 Service and repairs 17

2 Conventions

Please make yourself familiar with these conventions; we use them throughout this user manual:

WARNING

Indicates a potentially hazardous situation which, if not avoided, could result in **death or serious injury**.

Do not proceed unless the required conditions are met and understood.

CAUTION

Indicates a potentially hazardous situation which, if not avoided, may result in **minor or moderate injury** or **component damage**.

Do not proceed unless the required conditions are met and understood.

NOTE

Indicates relevant information that requires your attention.

3 Introducing the TRAY

Quantifi Photonics' TRAY module stores fragile passive fiber optic components such as splitters, patch cords, WDM couplers, and isolators in one convenient module.

The TRAY is available in two configurations – 1 slot with 5 connectors, and 2 slots with 17 connectors.

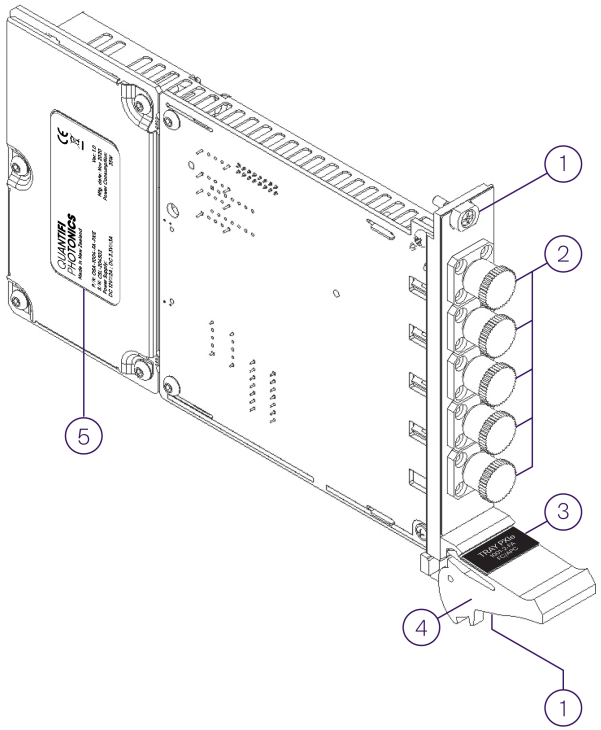

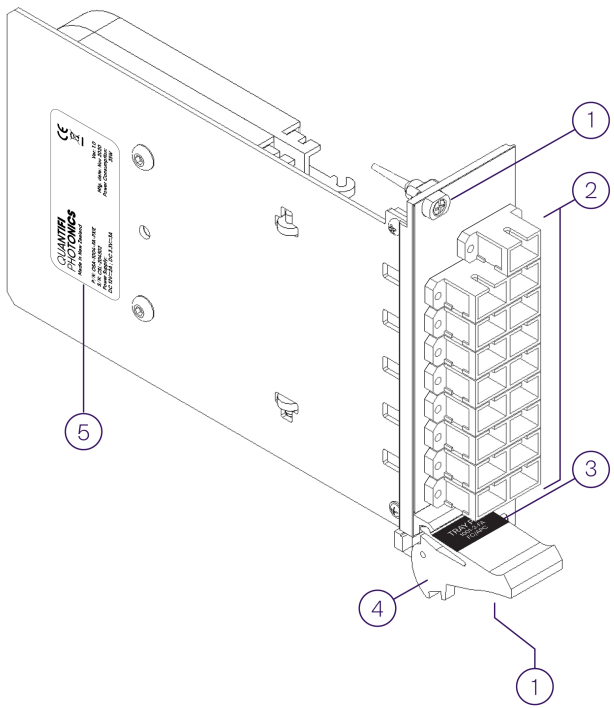

1	Fastening screw	4	Fastening clip
2	Connector	5	Module information
3	Module identifier		

3.1 Environmental conditions

Range of environmental conditions:

Indoor or outdoor use	Indoor only
Altitude	Max. 2000m
Operating temperature range	5°C to 45°C | 41°F to 113°F
Storage temperature range	-40°C to 70°C | -40°F to 158°F
Relative humidity range	20% to 80%

4 Operating the TRAY

The TRAY module has an optical fiber component tray into which the user can install their choice of passive instrumentation.

1. Remove the clear plastic covering from the top of the tray.
2. Coil the fiber against the inside wall of the fiber tray. The plastic tabs ensure that no coiled fiber sits outside the tray.
3. In the center of the tray there are 3 slots into which the passive component metal cylindrical package can be installed.
4. Replace the clear plastic covering onto the top of the tray.

5 Setting up hardware

Quantifi Photonicsmodules are designed for easy installation in a PXIe-compatible chassis.

Make sure to follow these instructions when installing or removing a Quantifi Photonics module from a PXIe chassis.

Ensure that the chassis being used supports PXIe (or contains PXI-hybrid compatible slots). If you are unsure if your chassis is compatible with your Quantifi Photonics product, please contact Quantifi Photonics Customer Support.

CAUTION

The product is sensitive to electrostatic discharge (ESD). To prevent damage from ESD:

- Do not remove the product from the antistatic packaging until required to do so.
- Wear a grounded wrist strap at all times when handling the product.

CAUTION

Skin contact may leave corrosive residue and damage a connector:

- Always clean optical end faces before mating.

NOTE

Please check for the fiber end-face type of the optical ports, such as PC or APC, and only use the same type optical connector to avoid damaging the end-face.

For advice on connector and fiber care, please refer to Working with optical fibers.

5.1 Install the module in a PXIe chassis

WARNING

When attempting to install or remove a module or any component of the PXIe chassis:

- Power the chassis OFF.
- Follow these installation instructions.
- After powering the PXIe chassis ON, please wait at least 2 minutes before attempting to communicate with the module. This gives the chassis time to boot and initialize the communication server.

1 Power the chassis OFF.

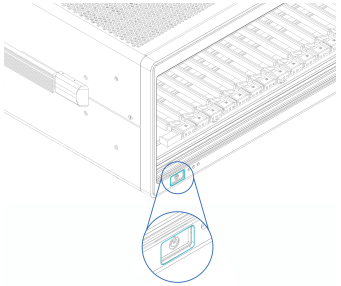

2 Remove the module from the anti-static bag. Retain the bag.

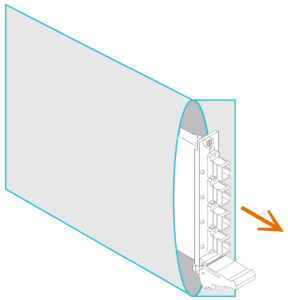

3 Align the module with the slot guide rails.

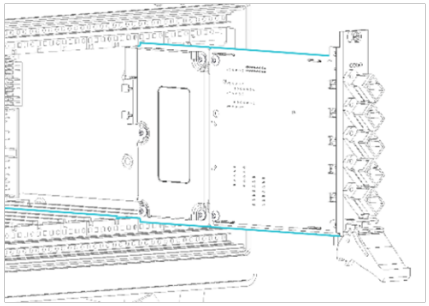

4 Push module into slot until you feel resistance from the backplane connection.

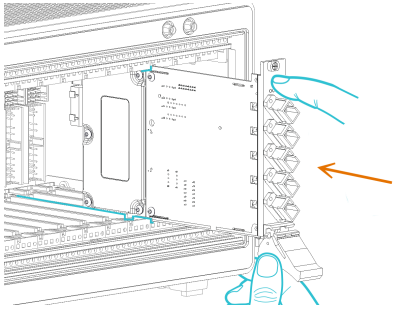

5 Engage the fastening clip. Secure all fastening screws.

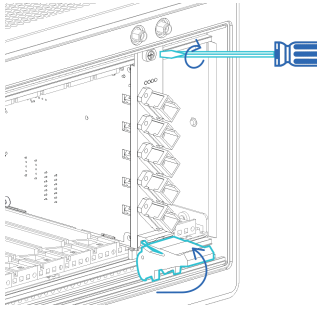

6 Power the chassis ON.

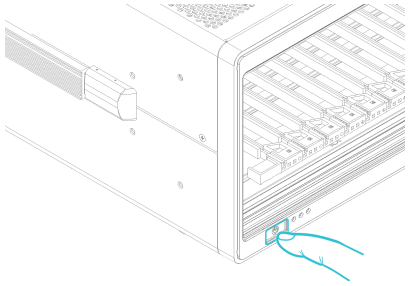

5.2 Uninstall the module from a PXIe chassis

WARNING

When attempting to install or remove a module or any component of the PXIe chassis:

- Power the chassis OFF.
- Follow these installation instructions.

1 Power the chassis OFF.

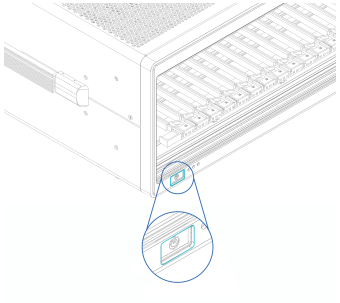

2 Unsecure the fastening screws and fastening clip.

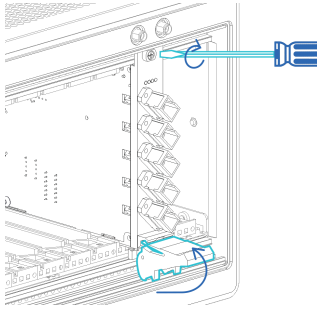

3 Pull out the module.

Use the fastening clip to pull. Do NOT pull on the connectors.

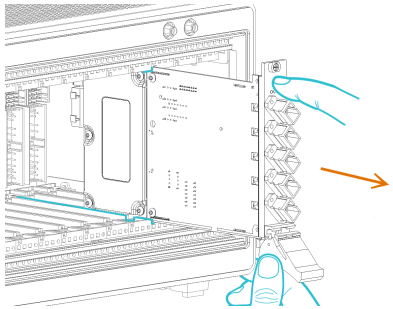

4 Store the module in its antistatic bag.

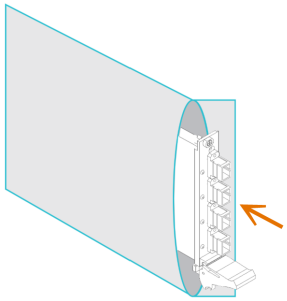

5 Power ON the chassis.

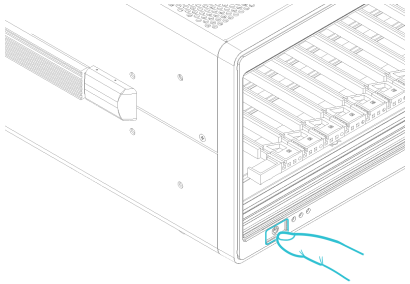

6 Working with optical fibers

Quantifi Photonics products are equipped with high quality optical connectors in compliance with EIA-455-21A standards.

CAUTION

Keep connectors clean and in good condition to ensure maximum power and to avoid erroneous readings. Quantifi Photonics is not responsible for damage or errors caused by bad fiber cleaning or handling.

- Always inspect fiber end faces for cleanliness using a fiber inspection probe before inserting them into a port..
- If required, clean fibers and faces as detailed below.

NOTE

- To avoid damaging ferrules or fiber faces due to mismatched connectors, always check ports and connector type information before inserting a connector. All Quantifi Photonics units are labeled with connector type information.
- Failing to align and/or connect fiber-optic cables properly will result in significant signal loss and reflection.

▶ When connecting a fiber-optic cable to a port:

1. Visually inspect the fiber end face using a fiber inspection microscope.
2. If a **connector end face** is dirty:
    - Wipe the connector end face using a reel-type cleaner and inspect again.
    - For stubborn hard to clean connectors:
        - Use lint-free fiber-cleaning wipes soaked in a fiber optic cleaning solution.
        - Wipe the connector on the soaked part.
        - Dry the connector by wiping on the dry part of the wipe, or by using a reel-type cleaner.
    - Repeat the process until connector inspection shows a clean fiber face.
3. If a **bulkhead inner connector face** is dirty:
    - Use a pen-type dry cleaner, align the cleaning tip with the port and push the cleaner until you hear the characteristic click. Inspect again.
    - For stubborn hard to clean bulkhead connectors:
        - Use a stick-type cleaner dipped in a fiber optic cleaning solution.
        - Carefully align and insert the stick into the connector and gently rotate the stick for several seconds applying light pressure.
        - Use a pen-type cleaner to dry the connector.
    - Repeat the process until connector inspection shows a clean fiber face.
4. If the fiber end face is clean:
    - Carefully align the connector and port to prevent the fiber end from touching the outside of the port or other surfaces. If the connector features a key, mate it correctly into the corresponding notch of the port bulkhead.

- Push the connector in so that the fiber-optic cable is firmly in place with adequate contact. If your connector features a screw sleeve, tighten the connector to firmly maintain the fiber in place. Do not over-tighten, as this will dam-age the fiber and the port bulkhead.

7 System requirements

Quantifi Photonics PXIe modules

Supported browsers for working with CohesionUI	Google Chrome™ Microsoft Edge®
Chassis	PXIe-compatible chassis that • supports PXIe, or • contains PXI hybrid compatible slots
Recommended PXIe controller operating system	Microsoft Windows® 10 (64-bit)

Quantifi Photonics MATRIQ / EPIQ instruments

Supported browsers for working with CohesionUI	Google Chrome™ Microsoft Edge®
Recommended client computer operating system	Microsoft Windows® 10 (64-bit)

8 Maintenance

To help ensure long, trouble-free operation:

- Always inspect fiber-optic connectors before using them and clean them if necessary.
- Keep the unit free of dust.
- Store the unit at room temperature in a clean and dry area. Keep the unit out of direct sunlight.
- Avoid high humidity or significant temperature fluctuations.
- Avoid unnecessary shocks and vibrations.
- If any liquids are spilled on or into the unit, power off the chassis immediately. Remove the unit and allow to dry completely.

WARNING

The use of controls, adjustments, and procedures other than those specified herein may result in exposure to hazardous situations or impair the protection provided by this unit.

8.1 Annual calibration schedule

To ensure that the unit is performing within specification, we recommend it is re-calibrated every 12 months.

All Quantifi Photonics products are calibrated during manufacture, and each product is shipped to the customer with a Calibration Certificate. On this certificate, the calibration date, as well as the next calibration due date are mentioned.

We recommend your product is returned for re-calibration before the listed due date, to ensure continued performance of the product. For re-calibration service information, or to send in a product for re-calibration service, email support@quantifiphotonics.com.

If the Calibration Certificate has been misplaced, or the calibration due date is not known, email support@quantifiphotonics.com.

9 Technical Support

9.1 Contacting the Technical Support Group

To obtain after-sales service or technical support for this product, contact Quantifi Photonics:

support@quantifiphotonics.com

To accelerate the process, please provide information such as the name and the serial number of the product (see the product identification label), as well as a description of your problem.

9.2 Transportation

Maintain a temperature range within specifications when transporting the unit.

Transportation damage can occur from improper handling.

The following steps are recommended to minimize the possibility of damage:

- Pack the product in its original packing material when shipping. If the original packaging is unavailable, use appropriate foam packaging to provide shock absorption and avoid displacement of the product inside the shipping box. Please keep all input connectors covered with the supplied anti-static plastic covers during transport and avoid any shipping material making contact with the sensitive connectors of the product.
- Avoid high humidity or large temperature fluctuations.
- Keep the product out of direct sunlight.
- Avoid unnecessary shocks and vibrations.

10 Warranty Information

10.1 General information

Quantifi Photonics Ltd (Quantifi Photonics) warrants from the date of the original shipment (the Warranty Period) that this product will conform to specifications and will be free from defects in material and workmanship for the applicable Warranty Period. Quantifi Photonics also warrants that the equipment will meet applicable specifications under normal use.

NOTE

The warranty can become null and void if:

- The unit has been tampered with, repaired, or worked upon by unauthorized individuals or non-Quantifi Photonics personnel.
- The warranty sticker has been removed.
- The unit has been opened, other than as explained in this guide.
- The unit serial number has been altered, erased, or removed.
- The unit has been misused, neglected, or damaged by accident.

THIS WARRANTY IS IN LIEU OF ALL OTHER WARRANTIES EXPRESSED, IMPLIED, OR STATUTORY, INCLUDING, BUT NOT LIMITED TO, THE IMPLIED WARRANTIES OF MERCHANTABILITY AND FITNESS FOR A PARTICULAR PURPOSE. IN NO EVENT SHALL QUANTIFI PHOTONICS BE LIABLE FOR SPECIAL, INCIDENTAL, OR CONSEQUENTIAL DAMAGES.

For full warranty terms and conditions, please visit quantifiphotonics.com.

10.2 Liability

Quantifi Photonics shall not be liable for damages resulting from the use of the product, nor shall be responsible for any failure in the performance of other items to which the product is connected or the operation of any system of which the product may be a part.

Quantifi Photonics shall not be liable for damages resulting from improper usage, transportation or unauthorized modification of the product, its accompanying accessories and software.

The external power supply that has been supplied by Quantifi Photonics with the unit can only be used with that unit, do not use it with any other product.

10.3 Exclusions

Quantifi Photonics reserves the right to make changes in the design or construction of any of its products at any time without incurring obligation to make any changes whatsoever on units purchased. Accessories, including but not limited to fuses, pilot lamps, batteries and universal interfaces (EUI)

used with Quantifi Photonics products are not covered by this warranty.

This warranty excludes failure resulting from: Improper use or installation, normal wear and tear, accident, abuse, neglect, fire, water, lightning or other acts of nature, causes external to the product or other factors beyond the control of Quantifi Photonics.

10.4 Certification

Quantifi Photonics certifies that this equipment met its published specifications at the time of shipment from the factory.

10.5 Service and repairs

To send any equipment for service, repair or calibration please contact the Technical Support Group: support@quantifiphotonics.com.

QUANTIFI PHOTONICS®
A Teradyne Company

Test. Measure. Solve.™

Quantifi Photonics is transforming the world of photonics test and measurement. Our portfolio of optical and electrical test instruments is rapidly expanding to meet the needs of engineers and scientists around the globe. From enabling ground-breaking experiments to driving highly efficient production testing, you'll find us working with customers to solve complex problems with optimal solutions.

To find out more, get in touch with us today.

General Enquiries	sales@quantifiphotonics.com
Technical Support	support@quantifiphotonics.com
Phone	+64 9 478 4849
North America	+1-800-803-8872

quantifiphotonics.com