QUANTIFI PHOTONICS®
A Teradyne Company

O2E

OPTICAL TO ELECTRICAL CONVERTER

SPECIFICATION SHEET

AVAILABLE IN PXI

AVAILABLE IN MATRIQ

quantifiphotonics.com

FEATURES

The O2E is a high bandwidth, broadband optical to electrical converter available in a range of configurations.

Various wavelengths

The O2E can be customized to a wide range of wavelengths and is suitable for single mode and multimode applications.

High bandwidth

Our high-performing O2E allows you to successfully test high baudrate signals with up to 50GHz of bandwidth.

Calibrated readings

Onboard storage of calibration data can be accessed via SCPI commands, making it easier to generate calibrated measurements and scale your measurement capabilities.

Amplified RF output

Various conversion gain options allow you to easily measure low power, high speed optical signals.

DC or AC coupled

Choose from DC or AC coupling to suit your specific test application.

TARGET APPLICATIONS

- Optical signal eye diagram measurement
- Relative intensity noise (RIN) measurement
- Optical pulse characterization
- Modulation depth measurement
- Extinction ratio measurement
- Precision timing/triggering
- Frequency response measurement of devices

Simple, intuitive control with COHESIONUI™

COHESIONUI makes it simple to control our PXI or MATRIQ instruments from a PC, tablet or smartphone. Its cutting-edge design offers a sleek modern interface, cross device compatibility, customizable views and remote network access.

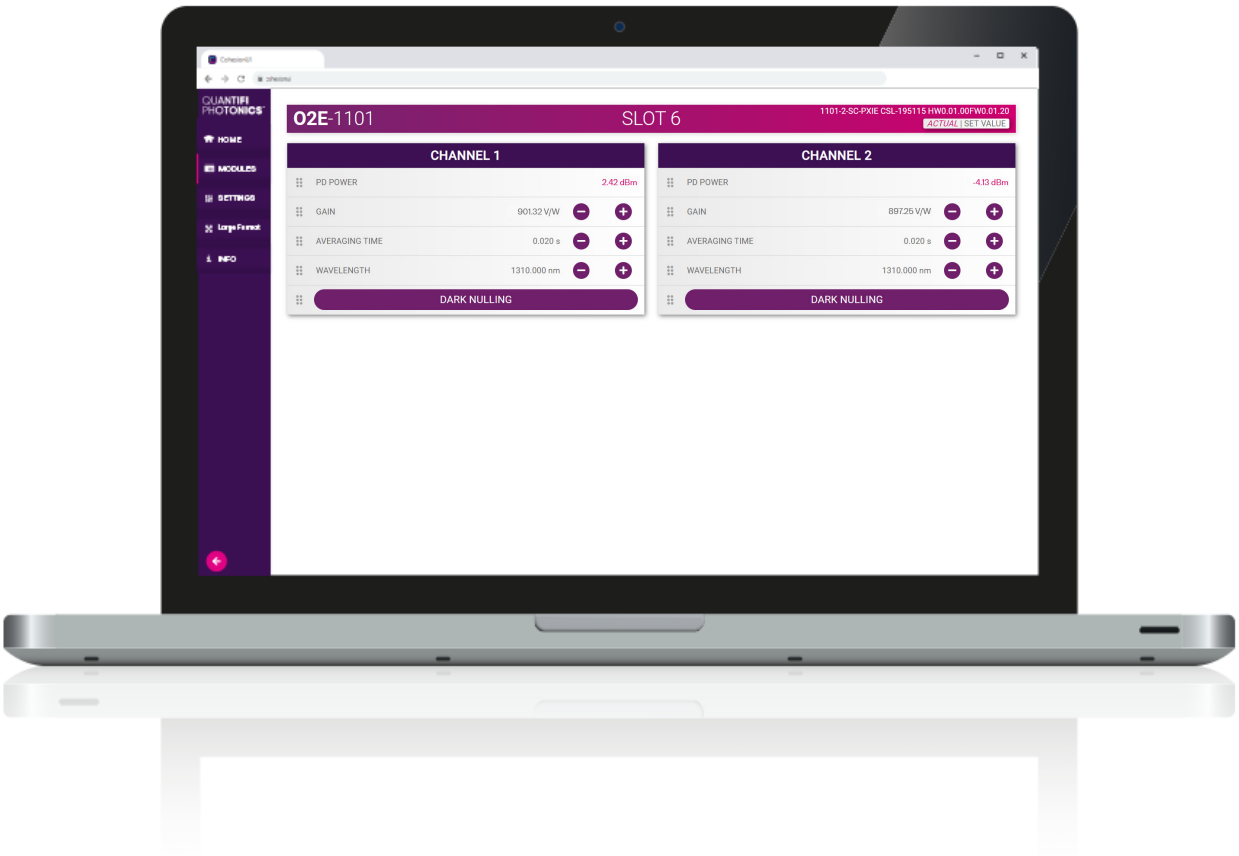

PXIe – MODULAR

Our expanding range of PXIe optical test solutions are used by customers in mixed-signal test and measurement systems, reducing complexity, lowering the cost of test and accelerating time to market.

- Multi vendor, open standard with over 2500 PXI modules available
- Advanced timing and synchronization capabilities across instruments
- Low latency, high performance processing and fast data throughput
- Design and build scalable, high channel count systems
- Small footprint and lower power consumption

MATRIQ – COMPACT & PORTABLE

The MATRIQ series provides the same high-performance test capabilities of our PXIe modules in an compact benchtop design. MATRIQ instruments are simple to setup and easy to operate, making them the perfect choice for your optical lab or test bench.

- Same performance and control as our PXIe modules
- Plug and play with USB or Ethernet connectivity
- Control via the web-based GUI, COHESIONUI or SCPI commands
- Compact and portable design saves benchtop space

PXI – MODULAR

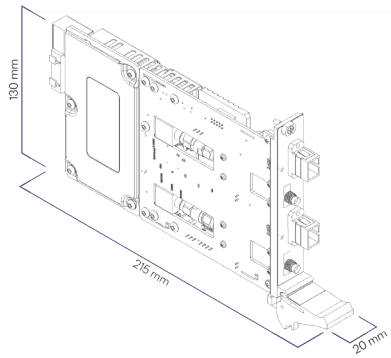

O2E-1001-2-FC-PXIE

MATRIQ – COMPACT & PORTABLE

O2E-1001-2-FC-MTRQ

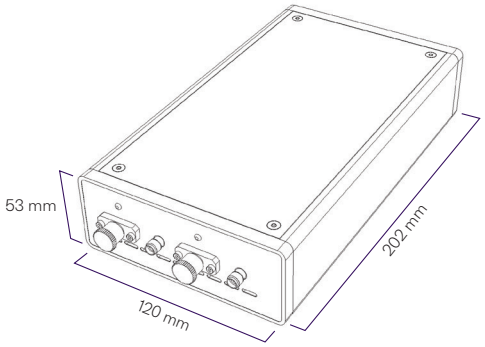

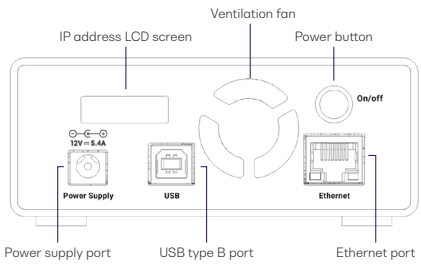

General Specifications	PXI	MATRIQ
Bus connection	PXIe	USB and Ethernet
PXI slots	1	-
Optical connector type	FC/PC, FC/APC, SC/APC, SC/PC	FC/PC, FC/APC, SC/APC, SC/PC
Dimensions (HxWxD)	130 mm x 20 mm x 215 mm | 5.1" x 0.8" x 8.5"	53 x 120 x 202 mm | 2.1 x 4.7 x 8.0 inches
Weight	~ 1 kg | ~2.2 lbs	~ 1.1 kg | ~ 2.4 lbs
Operating temperature range	5 °C to 45 °C | 41 °F to 113 °F	5 °C to 40 °C | 41 °F to 104 °F
Storage temperature range	-40 °C to 70 °C | -40 °F to 158 °F	-40 °C to 70 °C | -40 °F to 158 °F

Power Specifications	PXI	MATRIQ
AC input voltage range	Please refer to the latest PXI Express Hardware Specifications published by the PXI Systems Alliance.	100 to 240 VAC
AC input current		1.3A (115 VAC), 0.9A (230 VAC)
AC frequency range		47 to 63 Hz
DC output voltage		12 V
DC output current max		5.41 A
Dimensions (LxWxH)		4.58 x 2.06 x 1.23" (116.3 x 52.4 x 31.3 mm)

Model Number	1101[2]	1101[2]
Bandwidth	25 GHz (typ), 24 GHz (min)	25 GHz (typ), 24 GHz (min)
Wavelength	950 to 1650 nm	950 to 1650 nm
Number of channels	1 or 2	1 or 2
Calibrated wavelengths (nm)	1310, 1490, 1550	1310, 1490, 1550
RF coupling	AC	AC
RF connector	K (2.92 mm)	K (2.92 mm)
RF impedance	50 ohms	50 ohms
Fiber	SMF-28	SMF-28
Damage level peak power	+4 dBm	+4 dBm
Optical return loss	30 dB SMF1	30 dB SMF1
PDL at 1550 nm	0.25 dB (max)	0.25 dB (max)
Conversion gain	900 V/W (typ), 700 V/W (min) at 1550 nm	900 V/W (typ), 700 V/W (min) at 1550 nm
Low frequency cutoff	< 100 KHz	< 100 KHz
Noise equivalent power[1]	39.7 pW/sqrt(Hz) (typ)	39.7 pW/sqrt(Hz) (typ)
Average power reading	Yes	Yes

Model Number	1201[2]	1201[2]
Bandwidth	35 GHz (typ), 30 GHz (min)	35 GHz (typ), 30 GHz (min)
Wavelength	800 to 1650 nm	800 to 1650 nm
Number of channels	1	1
Calibrated wavelengths (nm)	850, 1310, 1490, 1550	850, 1310, 1490, 1550
RF coupling	DC	DC
RF connector	K (2.92 mm)	K (2.92 mm)
RF impedance	50 ohms	50 ohms
Fiber	50µ core MMF	50µ core MMF
Damage level peak power	+8 dBm	+8 dBm
Optical return loss	24 dB SMF1 14 dB MMF	24dB SMF1 14 dB MMF
PDL at 1550 nm	-	-
Conversion gain	100 V/W (typ) at 1550 nm 100 V/W (typ) at 1310 nm 70 V/W (typ) at 850 nm	100 V/W (typ) at 1550 nm 100 V/W (typ) at 1310 nm 70 V/W (typ) at 850 nm
Low frequency cutoff	0 Hz	0 Hz
Noise equivalent power[1]	39.7 pW/sqrt(Hz) (typ)	39.7 pW/sqrt(Hz) (typ)
Average power reading	Yes	Yes

Model Number	1301[2]	1301[2]
Bandwidth	50 GHz (typ)	50 GHz (typ)
Wavelength	1200 to 1650 nm	1200 to 1650 nm
Number of channels	1	1
Calibrated wavelengths (nm)	1310, 1490, 1550	1310, 1490, 1550
RF coupling	DC	DC
RF connector	V (1.85 mm)	V (1.85 mm)
RF impedance	50 ohms	50 ohms
Fiber	SMF-28	SMF-28
Damage level peak power	+8 dBm	+8 dBm
Optical return loss	30 dB SMF1	30 dB SMF1
PDL at 1550 nm	0.1 dB (typ), 0.2 dB (max)	0.1 dB (typ), 0.2 dB (max)
Conversion gain	90 V/W (typ) at 1310 nm	90 V/W (typ) at 1310 nm
Low frequency cutoff	0 Hz	0 Hz
Noise equivalent power[1]	41 pW/sqrt(Hz) (typ)	41 pW/sqrt(Hz) (typ)
Average power reading	Yes	Yes

Model Number	1404[3]	1404[3]
Bandwidth	9 GHz (typical), 8 GHz (minimum)	Not available in MATRIQ
Wavelength	750 to 1650 nm	
Number of channels	1 or 2	
Calibrated wavelengths (nm)	1271, 1291, 1311, 1331, 1351, 1371, 1391, 1411, 1310, 1490, 1550	
RF coupling	AC	
RF connector	SMA	
RF impedance	50 ohms	
Fiber	62.5 µm MMF	
Damage level AC peak power	-3.5 dBm	
Damage level DC power	3.5 dBm	
Optical return loss	16 dB	
Conversion gain	7,500 V/W (typical), 5,500 V/W (minimum) at 1310 nm	
Low frequency cutoff	< 100 KHz	
Average power reading	Yes	

SPECS AS OF SEPTEMBER 2026

Notes

1. At wavelength with maximum conversion gain.
2. Preliminary specifications.
3. Advanced specifications subject to confirmation.

ORDERING INFORMATION

O2E - XXXX - X - XX - PXIE
O2E - XXXX - X - XX - MTRQ

Model number
1101 = 25 GHz, AC coupled, conversion gain of 900 V/W
1201 = 35 GHz, DC coupled, conversion gain of 100 V/W
1301 = 50 GHz, DC coupled, conversion gain of 90 V/W
1404 = 9 GHz, AC coupled, conversion gain of 7,500 V/W

Connector type
FC = FC/PC
FA = FC/APC
SC = SC/PC
SA = SC/APC

Number of channels
1 = 1 channel
2 = 2 channels (not available for the 1201 & 1301)

WARRANTY INFORMATION

This product comes with a standard 1 year warranty.

EXTENDED WARRANTIES AND CALIBRATION PLANS

With an **extended warranty and calibration plan** you'll spend more time focused on your priorities and less time worrying about maintenance.

Add a **3 or 5 year extended warranty** when you purchase your Quantifi Photonics instruments.

Guarantee performance

Ensure your equipment is operating at the best it can be for reliable and accurate results.

Lower cost of ownership

Lock in savings and maximise your testing budget with a lower base cost of ownership.

Peace of mind

Spend less time worrying about maintenance and more on generating results.

CALIBRATION PLANS FOR ADDITIONAL DISCOUNTS

Order a **calibration plan** when purchasing your Quantifi Photonics instruments and get additional discounts.

10% Discount On calibrations ordered at the time of purchase.

25% Discount Add on an extended warranty and receive a 25% discount on calibrations.

Over time and with regular use, all optical parts and connectors require re-calibration and maintenance to guarantee accurate and reliable performance. We recommend Quantifi Photonics optical instruments are re-calibrated every 12 months. With an instrument calibration performed by Quantifi Photonics technicians you receive:

- Comprehensive calibration to factory specifications
- End-to-end inspection to ensure all instrument functions are working and connectors are clean
- Firmware, software and documentation updates
- Certificate of calibration which includes detailed test results

How to do I **secure my extended warranty or calibration plan**?

Contact your Quantifi Photonics sales representative or email **sales@quantifiphotonics.com**

Extended warranties and calibration plans must be ordered at the time of purchase and are available only for Quantifi Photonics' products. The 25% calibration discount only applies to calibrations while the product is covered by the extended warranty period.

Our portfolio of optical & electro-optical test modules is rapidly expanding to meet a wide range of customer requirements and applications.

For more details visit **quantifiphotonics.com/products**

Tunable Laser Source

Versatile telecom laser sources with full tunability across C or L bands. Narrow 100 kHz linewidth, up to 16.5 dBm of power, optional whisper mode to disable frequency dither.

Fixed Wavelength Laser Source

Highly-customizable DFB or FP laser sources available in a wide range of wavelengths and powers up to 24 dBm. Supports SMF, MMF and PMF.

Swept, Tunable Continuous Wave Laser

Swept, tunable continuous wave (CW) laser source with 0.01 dB power stability and 400 nm/s high-speed scan rate for R&D and production testing.

Superluminescent Diode Broadband Light Source

Super-luminescent LED light source with high output power, large bandwidth and low spectral ripple and various wavelengths.

ELSFP-Compliant External Laser Source

Uses ELSFP-compliant pluggable modules to provide 8 channels of CW optical power at 1310 nm from 20 to 25 dBm.

Variable Optical Attenuator (VOA)

Fast attenuation speed with low insertion loss and built-in power monitoring. Operates in fixed attenuation or constant output power modes. Support SMF, MMF and PMF.

Polarization Controller & Scrambler

High-speed automated polarization control with broad wavelength coverage from 1260 to 1650 nm, low insertion loss and back reflection. Full remote control via intuitive GUI, LabVIEW or SCPI.

Optical Power Meter

Fast terminating or inline monitoring of optical signal power from -60 to +10 dBm across 750 to 1700 nm wavelengths. Model with logarithmic analog output for applications such as silicon photonics fiber alignment.

Optical Spectrum Analyzer (OSA)

Cost-effective, spectral measurement in a compact module with built-in analysis for: SMSR, OSNR & spectral width. Targeted wavelengths for specific applications in O band, C band & L band.

Optical-to-Electrical Converter

High bandwidth, broadband O-to-E converter. Choose from 1 or 2 channels, AC or DC coupling and various conversion gain and operating wavelength ranges.

Optical Switch

Proven reliability and fast switching time. Wide variety of switch onfigurations: 1x4, 1x16, 16x16 and more. Models support SMF, MMF and PMF.

Photocurrent Amplifier

Versatile photodiode amplifier to measure photocurrent in photonic integrated circuit (PIC) applications. Digital and analog measurement.

Photonic Doppler Velocimeter (PDV)

Purpose-built module for Photonic Doppler Velocimetry (PDV). A circulator, two VOAs and a passive coupler all built into one compact module.

Passive Component Integration

Integrate passive optical components of your choice such as WDM couplers, splitters, band-pass filters, PM beamsplitters and circulators. SMF, MMF and PMF.

Digital Sampling Oscilloscope (DSO)

Digital equivalent-time sampling oscilloscope (DSO) with high-quality precision timebase and low jitter mode, available in 1 or 2 channels in a compact benchtop instrument.

Clock Recovery Instrument (CDR)

Clock recovery instrument for the QCA Series. Low jitter design and precise phase-locking provide a reliable, scalable solution for high-speed communication testing.

Test.
Measure.
Solve.™

Quantifi Photonics provides test solutions to help customers unlock scalable and cost-effective high-volume manufacturing of photonic integrated circuits (PICs), co-packaged optics and pluggable optics. The company's portfolio includes a wide range of photonic test instruments, and digital sampling oscilloscopes, available as benchtop or the industry-standard PXI format to support cost-effective, high-throughput design verification testing and high-volume manufacturing.

To find out more, get in touch with us today.

General Enquiries	sales@quantifiphotonics.com
Technical Support	support@quantifiphotonics.com
Phone - NZ	+64 9 478 4849
Phone - USA	+1-800-803-8872

quantifiphotonics.com

QUANTIFI PHOTONICS®
A Teradyne Company

Quantifi Photonics Ltd © 2026. All rights reserved. No part of this publication may be reproduced, adapted, or translated in any form or by any means without the prior permission from Quantifi Photonics Ltd. All specifications are subject to change without notice. Please contact Quantifi Photonics for the latest information.