QUANTIFI PHOTONICS®
A Teradyne Company

IQABC

AUTOMATIC BIAS CONTROLLER

SPECIFICATION SHEET

AVAILABLE IN MATRIQ

quantifiphotonics.com

The IQABC uses advanced algorithms to Automatically Bias Control (ABC) the DC voltage bias points required to control an OIF-compliant optical modulator.

The easy-to-use COHESION**UI**™ graphical interface enables the user to quickly optimize these DC modulator voltages (either automatically or manually) for ideal QPSK, DP-QPSK, and other M-QAM optically modulated signals.

Format-independent ABC algorithm.

The robust ABC algorithm works with any modulation formats for a truly automated operation.

Compatible with OIF standard IQ modulators.

The external modulator adaptor board provides simple and quick connectivity to any IQ modulator with OIF compatibility.

Accurate & stable tracking of bias drifts.

The advanced ABC algorithm constantly tracks any drift, so you get stable and repeatable results every time.

Independent control of all DC biases.

Each of I, Q or phase DC biases can be controlled independently in either automatic or manual mode.

Superior connectivity.

You can control IQABC locally or remotely via usb or ethernet. With its SCPI compatibility, the option is yours.

Easy-to-use software.

COHESIONUI web-based user interface provides access to all the functions in a clean, simple and intuitive graphical layout.

IQ OPTIMIZATION MADE SIMPLE

Hit the AUTO button and focus on your research without worrying if your modulator is biased correctly.

Quantifi Photonics' IQABC's advanced ABC (Automatic Bias Control) algorithm accurately and reliably controls and optimizes all the modulator bias points regardless of the modulation format or pattern.

Optimizing DC bias points of an IQ modulator is no trivial task. There are six different Mach-Zehnder structures inside one dual polarization IQ modulator, all simultaneously influencing the properties of a single optical signal. Trying to optimize bias points using just the intensity measurement of the optical signal is time consuming, inaccurate and requires a lot of knowledge and experience.

With its robust and adaptive ABC algorithm, IQABC will take care of finding optimal bias points and maintaining optimization against any bias drifts or changes to the driving signal. So put IQABC to work and enjoy having a stable and reliable optical signal for all your testing and development needs.

CONVENIENT AND SIMPLE TO OPERATE

Simply connect your OIF compliant IQ modulator to an IQABC modulator adaptor board and feed the modulator's optical output to IQABC, then you are ready to go. The IQABC starts to optimize the biases automatically upon start-up.

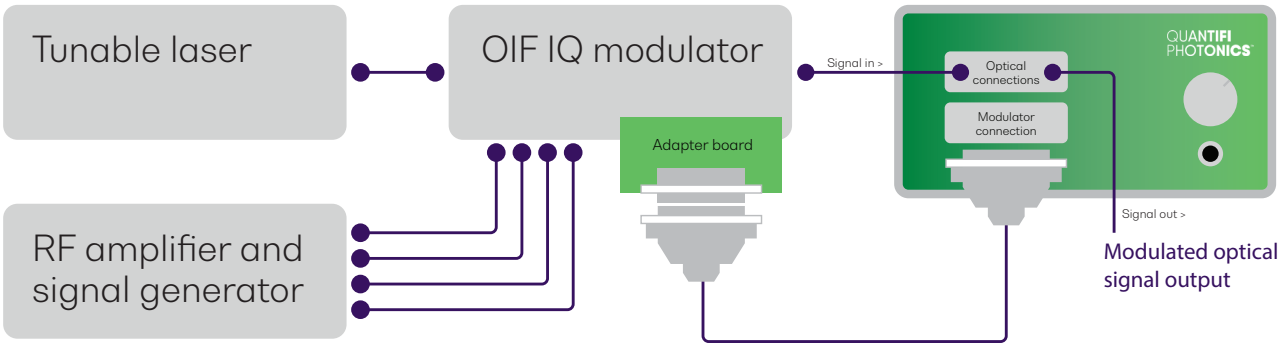

IQABC connection example

Simple, intuitive control with COHESION**UI**™

COHESION**UI** makes it simple to control our PXI or MATRIQ instruments from a PC, tablet or smartphone. Its cutting-edge design offers a sleek modern interface, cross device compatibility, customizable views and remote network access.

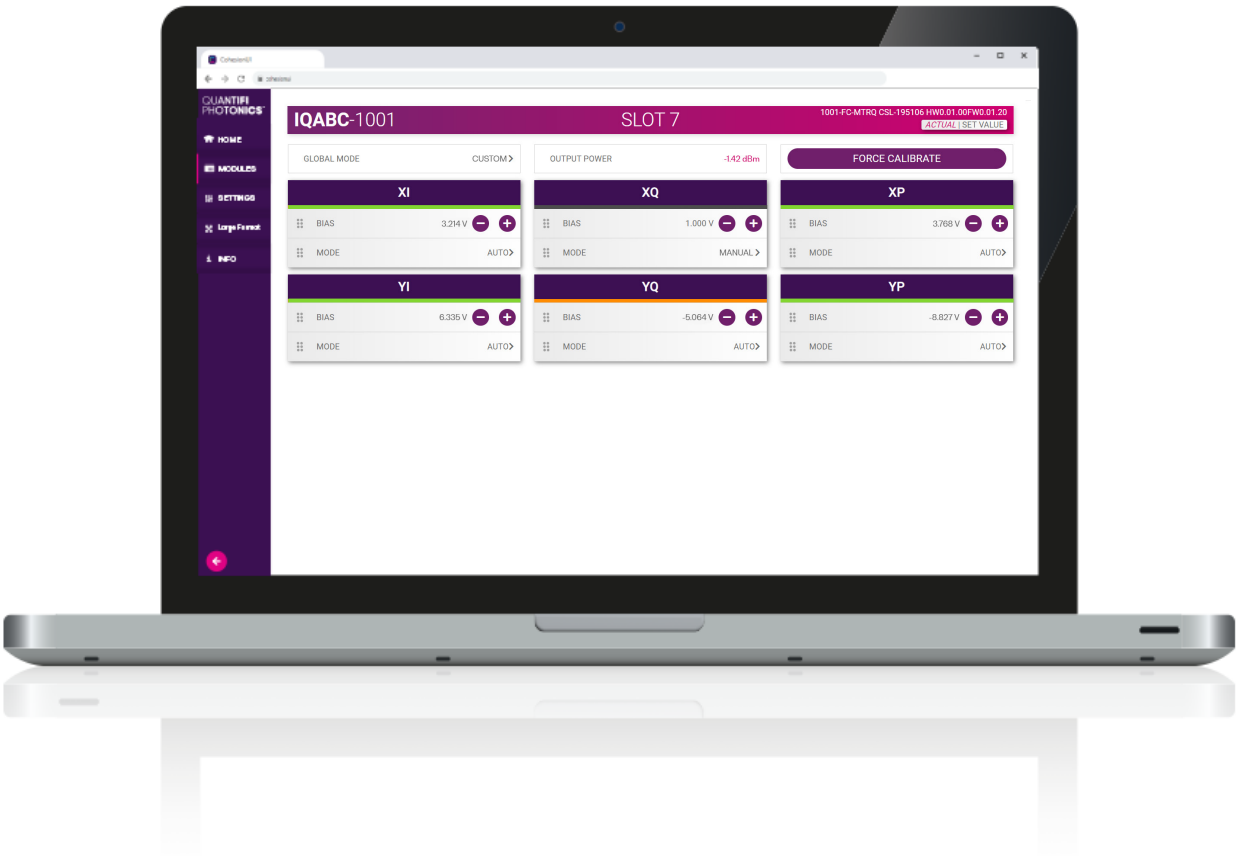

The MATRIQ series provides the same high-performance test capabilities of our PXIe modules in an compact benchtop design. MATRIQ instruments are simple to setup and easy to operate, making them the perfect choice for your optical lab or test bench.

- Same performance and control as our PXIe modules
- Plug and play with USB or Ethernet connectivity
- Control via the web-based GUI, COHESIONUI or SCPI commands
- Compact and portable design saves benchtop space

IQABC-1001-1-FC-MTRQ

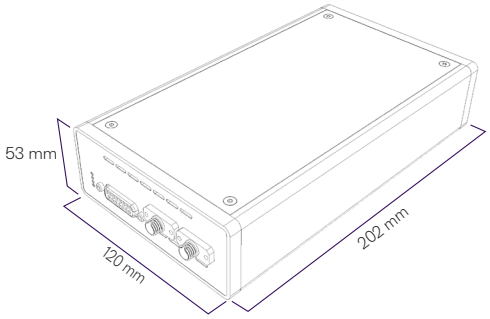

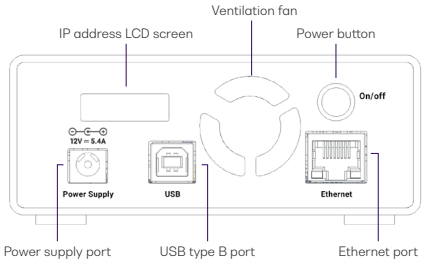

General Specifications	MATRIQ
Bus connection	USB or ethernet
Slot count	-
Optical connector type	FC/PC, FC/APC, SC/PC, SC/APC
Number of channels	1
Dimensions (HxWxD)	53 x 120 x 202 mm | 2.1 x 4.7 x 8.0 inches
Weight	~ 1.1 kg | ~ 2.4 lbs
Operating temperature range	5 °C to 40 °C | 41 °F to 104 °F
Storage temperature range	-40 °C to 70 °C | -40 °F to 158 °F

Power Specifications	MATRIQ
AC input voltage range	100 to 240 VAC
AC input current	1.3 A (115 VAC), 0.9 A (230 VAC)
AC frequency range	47 to 63 Hz
DC output voltage	12 V
DC output current max	5.41 A
Dimensions (LxWxH)	4.58 x 2.06 x 1.23" (116.3 x 52.4 x 31.3 mm)

Specifications continued over page

TECHNICAL SPECIFICATIONS

Model Number	1001	1002
Fiber type	Single mode fiber	Polarization mode fiber
Supported modulator types	Single & dual pol. LiNbO3 IQ Mach Zehnder	Single & dual pol. LiNbO3 IQ Mach Zehnder
Supported modulation formats	Any modulation format	Any modulation format
Bias control options	Automatic locking and individual manual bias	Automatic locking and individual manual bias
Maximum bias voltage range	28 V	28 V
Number of bias control channels	6	6
Start up time until settled	< 3 minutes (< 1 minute typical)	< 3 minutes (< 1 minute typical)
Quadrature error	Averaged mean < ± 0.3°, standard deviation > 24 hours: < 2°	Averaged mean < ± 0.3°, standard deviation > 24 hours: < 2°
ABC impact on EVM	< 1%	< 1%
Wavelength range	1260 nm - 1620 nm	1510 nm - 1610 nm
Dither size vs Vpi[1]	max 5%, typical 2%	max 5%, typical 2%
Max optical input power to ABC	+10 dBm	+10 dBm
Optical insertion loss[3]	< 0.5 dB	< 0.5 dB
Optical power operating range[2]	-5 dBm to +10 dBm	-5 dBm to +10 dBm
RF drive levels supported	0 to 1.9 Vpi	0 to 1.9 Vpi
Manual bias control range	± 13 V	± 13 V

Notes

1. A small low frequency dither is applied to the biases as part of the control mechanism.
2. Average power with modulation applied.
3. Excluding optical connectors.
4. Specifications are valid at 23 °C ± 3 °C.

ORDERING INFORMATION

IQABC - XXXX - X - XX - MTRQ

Model number:
1001 = Single Mode Fiber
1002 = Polarization Maintaining Fiber

Connector Type
FC = FC/PC
FA = FC/APC
SC = SC/PC
SA = SC/APC

Number of channels
1 = 1 channel

ACCESSORIES

IQABC - XXXX

Options
9001 = Solder type adapter board for use with OIF compatible dual polarization IQ modulator.
9002 = Plug-in type adaptor board for use with OIF compatible dual polarization IQ modulator.
9003 = Solder type adapter board for use with OIF compatible single polarization IQ modulator.
9004 = Plug-in type adaptor board for use with OIF compatible single polarization IQ modulator.
9005 = Cable for connecting the adaptor board to the IQABC main unit.
9006 = Break-out cable for use with any IQ modulator.

WARRANTY INFORMATION

This product comes with a standard 1 year warranty.

EXTENDED WARRANTIES AND CALIBRATION PLANS

With an **extended warranty and calibration plan** you'll spend more time focused on your priorities and less time worrying about maintenance.

Add a **3 or 5 year extended warranty** when you purchase your Quantifi Photonics instruments.

Guarantee performance

Ensure your equipment is operating at the best it can be for reliable and accurate results.

Lower cost of ownership

Lock in savings and maximise your testing budget with a lower base cost of ownership.

Peace of mind

Spend less time worrying about maintenance and more on generating results.

CALIBRATION PLANS FOR ADDITIONAL DISCOUNTS

Order a **calibration plan** when purchasing your Quantifi Photonics instruments and get additional discounts.

10% Discount On calibrations ordered at the time of purchase.

25% Discount Add on an extended warranty and receive a 25% discount on calibrations.

Over time and with regular use, all optical parts and connectors require re-calibration and maintenance to guarantee accurate and reliable performance. We recommend Quantifi Photonics optical instruments are re-calibrated every 12 months. With an instrument calibration performed by Quantifi Photonics technicians you receive:

- Comprehensive calibration to factory specifications
- End-to-end inspection to ensure all instrument functions are working and connectors are clean
- Firmware, software and documentation updates
- Certificate of calibration which includes detailed test results

How to do I **secure my extended warranty or calibration plan**?

Contact your Quantifi Photonics sales representative or email **sales@quantifiphotonics.com**

Extended warranties and calibration plans must be ordered at the time of purchase and are available only for Quantifi Photonics' products. The 25% calibration discount only applies to calibrations while the product is covered by the extended warranty period.

Our portfolio of optical & electro-optical test modules is rapidly expanding to meet a wide range of customer requirements and applications.

For more details visit **quantifiphotonics.com/products**

Tunable Laser Source

Versatile telecom laser sources with full tunability across C or L bands. Narrow 100 kHz linewidth, up to 16.5 dBm of power, optional whisper mode to disable frequency dither.

Fixed Wavelength Laser Source

Highly-customizable DFB or FP laser sources available in a wide range of wavelengths and powers up to 24 dBm. Supports SMF, MMF and PMF.

Swept, Tunable Continuous Wave Laser

Swept, tunable continuous wave (CW) laser source with 0.01 dB power stability and 400 nm/s high-speed scan rate for R&D and production testing.

Superluminescent Diode Broadband Light Source

Super-luminescent LED light source with high output power, large bandwidth and low spectral ripple and various wavelengths.

ELSFP-Compliant External Laser Source

Uses ELSFP-compliant pluggable modules to provide 8 channels of CW optical power at 1310 nm from 20 to 25 dBm.

Variable Optical Attenuator (VOA)

Fast attenuation speed with low insertion loss and built-in power monitoring. Operates in fixed attenuation or constant output power modes. Support SMF, MMF and PMF.

Polarization Controller & Scrambler

High-speed automated polarization control with broad wavelength coverage from 1260 to 1650 nm, low insertion loss and back reflection. Full remote control via intuitive GUI, LabVIEW or SCPI.

Optical Power Meter

Fast terminating or inline monitoring of optical signal power from -60 to +10 dBm across 750 to 1700 nm wavelengths. Model with logarithmic analog output for applications such as silicon photonics fiber alignment.

Optical Spectrum Analyzer (OSA)

Cost-effective, spectral measurement in a compact module with built-in analysis for: SMSR, OSNR & spectral width. Targeted wavelengths for specific applications in O band, C band & L band.

Optical-to-Electrical Converter

High bandwidth, broadband O-to-E converter. Choose from 1 or 2 channels, AC or DC coupling and various conversion gain and operating wavelength ranges.

Optical Switch

Proven reliability and fast switching time. Wide variety of switch onfigurations: 1x4, 1x16, 16x16 and more. Models support SMF, MMF and PMF.

Photocurrent Amplifier

Versatile photodiode amplifier to measure photocurrent in photonic integrated circuit (PIC) applications. Digital and analog measurement.

Photonic Doppler Velocimeter (PDV)

Purpose-built module for Photonic Doppler Velocimetry (PDV). A circulator, two VOAs and a passive coupler all built into one compact module.

Passive Component Integration

Integrate passive optical components of your choice such as WDM couplers, splitters, band-pass filters, PM beamsplitters and circulators. SMF, MMF and PMF.

Digital Sampling Oscilloscope (DSO)

Digital equivalent-time sampling oscilloscope (DSO) with high-quality precision timebase and low jitter mode, available in 1 or 2 channels in a compact benchtop instrument.

Clock Recovery Instrument (CDR)

Clock recovery instrument for the QCA Series. Low jitter design and precise phase-locking provide a reliable, scalable solution for high-speed communication testing.

Test.
Measure.
Solve.™

Quantifi Photonics provides test solutions to help customers unlock scalable and cost-effective high-volume manufacturing of photonic integrated circuits (PICs), co-packaged optics and pluggable optics. The company's portfolio includes a wide range of photonic test instruments, and digital sampling oscilloscopes, available as benchtop or the industry-standard PXI format to support cost-effective, high-throughput design verification testing and high-volume manufacturing.

To find out more, get in touch with us today.

General Enquiries	sales@quantifiphotonics.com
Technical Support	support@quantifiphotonics.com
Phone - NZ	+64 9 478 4849
Phone - USA	+1-800-803-8872

quantifiphotonics.com

QUANTIFI PHOTONICS®
A Teradyne Company

Quantifi Photonics Ltd © 2026. All rights reserved. No part of this publication may be reproduced, adapted, or translated in any form or by any means without the prior permission from Quantifi Photonics Ltd. All specifications are subject to change without notice. Please contact Quantifi Photonics for the latest information.