QUANTIFI PHOTONICS®
A Teradyne Company

Passive

PASSIVE COMPONENT INTEGRATION

SPECIFICATION SHEET

AVAILABLE IN PXI

AVAILABLE IN MATRIQ

quantifiphotonics.com

This product can be customized to meet your specific requirements. If you don't see what you need below, please contact us.

Model Number	Configuration	Connector type	Slot count in PXI
Passive-1001	1310 ± 80 nm, 1×2 (50/50) splitter	FC/PC, FC/APC, SC/PC, SC/APC	1
Passive-1002	1260 to 1650 nm, 1×4 (25/25/25/25) splitter	FC/PC, FC/APC, SC/PC, SC/APC	1
Passive-1003	CWDM8 MUX	SC/PC, SC/APC	2
Passive-1004	CWDM8 DeMUX	SC/PC, SC/APC	2
Passive-1005	1310 nm, 1×2 (99/1) splitter	FC/PC, FC/APC, SC/PC, SC/APC	1
Passive-1006	CWDM4 MUX	FC/PC, FC/APC, SC/PC, SC/APC	1
Passive-1007	CWDM4 DeMUX	FC/PC, FC/APC, SC/PC, SC/APC	1
Passive-1008	1550 ± 80 nm, 1×2 (50/50) splitter	FC/PC, FC/APC, SC/PC, SC/APC	1
Passive-1009	1550 nm optical circulator	FC/PC, FC/APC, SC/PC, SC/APC	1
Passive-1010	1310 nm, 1×8 splitter	SC/PC, SC/APC	2
Passive-1011	1260 to 1650 nm, 1×16 fiber tree splitter, SMF-28 fiber	SC/PC, SC/APC	2
Passive-1012	1550 ± 40nm, 1x2 (30/70) splitter	FC/PC, FC/APC, SC/PC, SC/APC	1
Passive-1013	1550 ± 40nm, 1x2 (40/60) splitter	FC/PC, FC/APC, SC/PC, SC/APC	1
Passive-1014	1000 m fiber delay element, 4.890 µs @1310 nm, 4.893 µs at 1550 nm, SMF-28e fiber	FC/PC, FC/APC, SC/PC, SC/APC	2
Passive-1015	1230 to 1390 nm optical circulator	FC/PC, FC/APC, SC/PC, SC/APC	1
Passive-1016	WDM bi-direction MUX/DEMUX (C34=1550.116 nm, C42=1543.730 nm, C50 =1537.397 nm, C58=1531.116 nm), <1.8 dB insertion loss	FC/PC, FC/APC, SC/PC, SC/APC	1
Passive-1017	1550 + 40 nm, 1x2 (90/10) splitter	FC/PC, FC/APC, SC/PC, SC/APC	1
Passive-1101	Encircle Flux mode conditioner IEC 61280-4-1: 2009 850/1310 nm, OM3 fiber, 3 dB insertion loss (typical), max power 10 mW	FC/PC, FC/APC, SC/PC, SC/APC	1
Passive-1301	1310 nm PM fiber 1×2 (50/50) splitter	FC/PC, FC/APC, SC/PC, SC/APC	1
Passive-1302	1550 nm PM fiber 1×4 (25/25/25/25) splitter	FC/PC, FC/APC, SC/PC, SC/APC	1
Passive-1401	Encircle Flux mode conditioner IEC 61280-4-1: 2009 850/1310 nm, OM1 fiber, 3 dB insertion loss (typical), max power 10 mW	FC/PC, FC/APC, SC/PC, SC/APC	1

CHOOSE YOUR FORM FACTOR

Our expanding range of PXIe optical test solutions are used by customers in mixed-signal test and measurement systems, reducing complexity, lowering the cost of test and accelerating time to market.

- Multi vendor, open standard with over 2500 PXI modules available
- Advanced timing and synchronization capabilities across instruments
- Low latency, high performance processing and fast data throughput
- Design and build scalable, high channel count systems
- Small footprint and lower power consumption

MATRIQ – COMPACT & PORTABLE

The MATRIQ series provides the same high-performance test capabilities of our PXIe modules in an compact benchtop design. MATRIQ instruments are simple to setup and easy to operate, making them the perfect choice for your optical lab or test bench.

- Same performance and control as our PXIe modules
- Plug and play with USB or Ethernet connectivity
- Control via the web-based GUI, COHESIONUI or SCPI commands
- Compact and portable design saves benchtop space

PXI – MODULAR

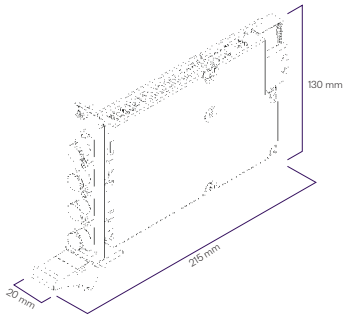

*PXIE 2-slot modules have a width of 40mm

MATRIQ – COMPACT & PORTABLE

PASSIVE-1002-1-FC-MTRQ

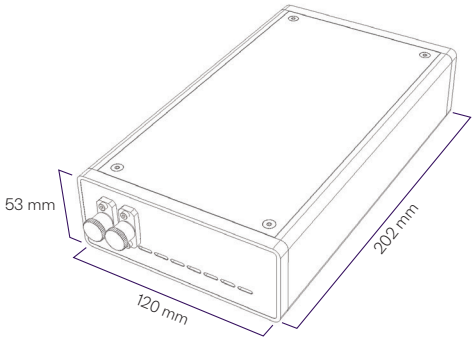

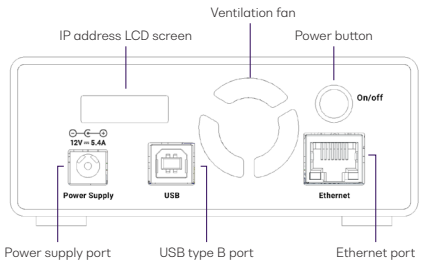

PASSIVE TECHNICAL SPECIFICATIONS

General Specifications	PXI	MATRIQ
Bus connection	PXIe	USB and Ethernet
Slot count	1	-
Dimensions (H x W x D)	130 x 20 x 215 mm | 5.1 x 0.8 x 8.5 inches	53 x 120 x 202 mm | 2.1 x 4.7 x 8.0 inches
Weight	~ 250 grams | ~ 0.55 lbs	~ 1.1 kg | ~ 2.4 lbs
Operating temperature range	5°C to 45°C | 41°F to 113°F	5°C to 40°C | 41°F to 104°F
Storage temperature range	-40°C to 70°C | -40°F to 158°F	-40°C to 70°C | -40°F to 158°F

ENCIRCLE FLUX MODE CONDITIONERS

The Passive 1101 and 1401 modules are passive mode conditioning instruments which guarantee the correct launch conditions are achieved regardless of the light source. This improves measurement accuracy, consistency between tests, and compliance with international standards.

It's well known that the modal condition of light sources can signficantly affect measurements of loss and bandwidth in multimode fibers. This can mean for example, that an OTDR measurement may give a different result because an OTDR employs a laser source versus an LED.

The Modal Launch Condition for the Passive 1101 and 1401 modal controllers is specified in terms of the width of the Near Field Pattern at 5, 15 and 75% of the maximum. The specification limits are shown below. On request, we can supply a Certificate of Conformance or a Test Certificate (850 and 1300 nm) which includes details on how the measurement was taken.

Model Number	1101	1101
Fiber type	OM3 50 µm	OM3 50 µm
Optical connector type	FC/PC, FC/APC, SC/PC, SC/APC	FC/PC, FC/APC, SC/PC, SC/APC
Wavelength range	850 nm and 1310 nm	850 nm and 1310 nm
Insertion loss	< 3 dB	< 3 dB
Encircled flux compliance	IEC 61280-4-1: 2009	IEC 61280-4-1: 2009
Maximum power	10 dBm	10 dBm
Return loss	> 45 dB	> 45 dB
Intensity (% of max): 5	40.8 µm (min) 44.0 µm (max)	40.8 µm (min) 44.0 µm (max)
Intensity (% of max): 15	36.0 µm (min) 41.6 µm (min)	36.0 µm (min) 41.6 µm (min)
Intensity (% of max): 75	16.0 µm (min) 26.4 µm (min)	16.0 µm (min) 26.4 µm (min)

PASSIVE TECHNICAL SPECIFICATIONS

Model Number	1401	1401
Fiber type	OM1 62.5 µm	OM1 62.5 µm
Optical connector type	FC/PC, FC/APC, SC/PC, SC/APC	FC/PC, FC/APC, SC/PC, SC/APC
Wavelength range	850 nm and 1310 nm	850 nm and 1310 nm
Insertion loss	< 3 dB	< 3 dB
Encircled flux compliance	IEC 61280-4-1: 2009	IEC 61280-4-1: 2009
Maximum power	10 dBm	10 dBm
Return loss	> 45 dB	> 45 dB
Intensity (% of max): 5	51.0 µm (min) 55.0 µm (max)	51.0 µm (min) 55.0 µm (max)
Intensity (% of max): 15	45.0 µm (min) 52.0 µm (max)	45.0 µm (min) 52.0 µm (max)
Intensity (% of max): 75	20.0 µm (min) 33.0 µm (max)	20.0 µm (min) 33.0 µm (max)

Near field intensity plot showing 85% limits

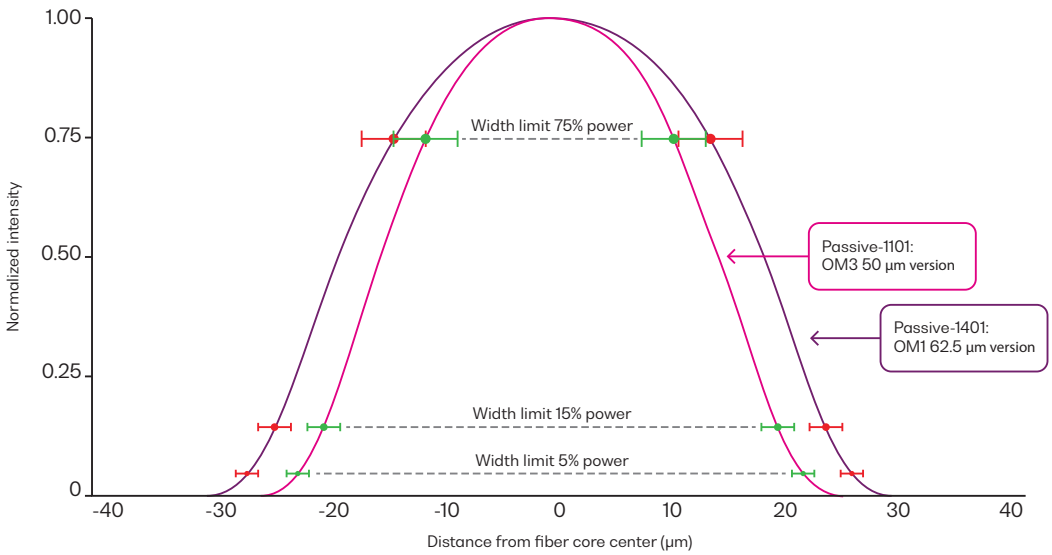

PASSIVE TECHNICAL SPECIFICATIONS

Model Number	1301	1301
Model description	1310 nm PM fiber 1×2 (50/50) splitter	1310 nm PM fiber 1×2 (50/50) splitter
Optical connector type	FC/PC, FC/APC, SC/PC, SC/APC	FC/PC, FC/APC, SC/PC, SC/APC
Center wavelength	1310 nm	1310 nm
Port configuration	1 x 2	1 x 2
Split ratio	50:50	50:50
Bandwidth	+ 40 nm	+ 40 nm
Return loss	> 50 dB	> 50 dB
Insertion loss	< 3.8 dB	< 3.8 dB
Extinction ratio	> 20 dB	> 20 dB
Fiber type	PM Panda fiber all ports	PM Panda fiber all ports
Axis transmission	Slow axis and fast axis both working	Slow axis and fast axis both working
Axis alignment	Slow axis aligned to connector key	Slow axis aligned to connector key

Model Number	1302	1302
Model description	1550 nm PM fiber 1×4 (25/25/25/25) splitter	1550 nm PM fiber 1×4 (25/25/25/25) splitter
Optical connector type	FC/PC, FC/APC, SC/PC, SC/APC	FC/PC, FC/APC, SC/PC, SC/APC
Center wavelength	1550 nm	1550 nm
Port configuration	1 x 4	1 x 4
Split ratio	25:25:25:25	25:25:25:25
Bandwidth	+ 30 nm	+ 30 nm
Return loss	> 7.8 dB	> 7.8 dB
Insertion loss	> 20 dB	> 20 dB
Extinction ratio	> 50 dB	> 50 dB
Fiber type	PM Panda fiber all ports	PM Panda fiber all ports
Axis transmission	Slow axis and fast axis both working	Slow axis and fast axis both working
Axis alignment	Slow axis aligned to connector key	Slow axis aligned to connector key

ORDERING INFORMATION

PASSIVE - XXXX - X - XX - PXIE
PASSIVE - XXXX - X - XX - MTRQ

Model number
1001 = 1310 ± 80 nm, 1×2 (50/50) splitter
1002 = 1260 to 1650 nm, 1×4 (25/25/25/25) splitter
1003 = CWDM8 MUX (SC/SA only)
1004 = CWDM8 DeMUX (SC/SA only)
1005 = 1310 ± 80 nm, 1×2 (99/1) splitter
1006 = CWDM4 MUX
1007 = CWDM4 DeMUX
1008 = 1550 ± 80 nm, 1×2 (50/50) splitter
1009 = 1550 nm optical circulator
1010 = 1310 nm, 1×8 splitter (SC/SA only)
1011 = 1260 to 1650 nm, 1×16 fiber tree splitter (SC/SA only)
1012 = 1550 ± 40nm, 1x2 (30/70) splitter
1013 = 1550 ± 40nm, 1x2 (40/60) splitter
1014 = 1000 m fiber delay, SMF-28e fiber
1015 = 1230 to 1390 nm optical circulator
1016 = WDM bi-direction MUX/DEMUX
1017 = 1550 ± 40nm, 1x2 (90/10) splitter
1101 = Encircle Flux mode conditioner, OM3 fiber
1301 = 1310 ± 40nm, PM fiber 1×2 (50/50) splitter
1302 = 1550 nm, PM fiber 1×4 (25/25/25/25) splitter
1401 = Encircle Flux mode conditioner, OM1 fiber

Connector type
FC = FC/PC
FA = FC/APC
SC = SC/PC
SA = SC/APC

Number of channels
1 = 1 channel

WARRANTY INFORMATION

This product comes with a standard 1 year warranty.

EXTENDED WARRANTIES AND CALIBRATION PLANS

With an **extended warranty and calibration plan** you'll spend more time focused on your priorities and less time worrying about maintenance.

Add a **3 or 5 year extended warranty** when you purchase your Quantifi Photonics instruments.

Guarantee performance

Ensure your equipment is operating at the best it can be for reliable and accurate results.

Lower cost of ownership

Lock in savings and maximise your testing budget with a lower base cost of ownership.

Peace of mind

Spend less time worrying about maintenance and more on generating results.

CALIBRATION PLANS FOR ADDITIONAL DISCOUNTS

Order a **calibration plan** when purchasing your Quantifi Photonics instruments and get additional discounts.

10% Discount On calibrations ordered at the time of purchase.

25% Discount Add on an extended warranty and receive a 25% discount on calibrations.

Over time and with regular use, all optical parts and connectors require re-calibration and maintenance to guarantee accurate and reliable performance. We recommend Quantifi Photonics optical instruments are re-calibrated every 12 months. With an instrument calibration performed by Quantifi Photonics technicians you receive:

- Comprehensive calibration to factory specifications
- End-to-end inspection to ensure all instrument functions are working and connectors are clean
- Firmware, software and documentation updates
- Certificate of calibration which includes detailed test results

How to do I **secure my extended warranty or calibration plan**?

Contact your Quantifi Photonics sales representative or email **sales@quantifiphotonics.com**

Extended warranties and calibration plans must be ordered at the time of purchase and are available only for Quantifi Photonics' products. The 25% calibration discount only applies to calibrations while the product is covered by the extended warranty period.

Our portfolio of optical & electro-optical test modules is rapidly expanding to meet a wide range of customer requirements and applications.

For more details visit **quantifiphotonics.com/products**

Tunable Laser Source

Versatile telecom laser sources with full tunability across C or L bands. Narrow 100 kHz linewidth, up to 16.5 dBm of power, optional whisper mode to disable frequency dither.

Fixed Wavelength Laser Source

Highly-customizable DFB or FP laser sources available in a wide range of wavelengths and powers up to 24 dBm. Supports SMF, MMF and PMF.

Swept, Tunable Continuous Wave Laser

Swept, tunable continuous wave (CW) laser source with 0.01 dB power stability and 400 nm/s high-speed scan rate for R&D and production testing.

Superluminescent Diode Broadband Light Source

Super-luminescent LED light source with high output power, large bandwidth and low spectral ripple and various wavelengths.

ELSFP-Compliant External Laser Source

Uses ELSFP-compliant pluggable modules to provide 8 channels of CW optical power at 1310 nm from 20 to 25 dBm.

Variable Optical Attenuator (VOA)

Fast attenuation speed with low insertion loss and built-in power monitoring. Operates in fixed attenuation or constant output power modes. Support SMF, MMF and PMF.

Polarization Controller & Scrambler

High-speed automated polarization control with broad wavelength coverage from 1260 to 1650 nm, low insertion loss and back reflection. Full remote control via intuitive GUI, LabVIEW or SCPI.

Optical Power Meter

Fast terminating or inline monitoring of optical signal power from -60 to +10 dBm across 750 to 1700 nm wavelengths. Model with logarithmic analog output for applications such as silicon photonics fiber alignment.

Optical Spectrum Analyzer (OSA)

Cost-effective, spectral measurement in a compact module with built-in analysis for: SMSR, OSNR & spectral width. Targeted wavelengths for specific applications in O band, C band & L band.

Optical-to-Electrical Converter

High bandwidth, broadband O-to-E converter. Choose from 1 or 2 channels, AC or DC coupling and various conversion gain and operating wavelength ranges.

Optical Switch

Proven reliability and fast switching time. Wide variety of switch onfigurations: 1x4, 1x16, 16x16 and more. Models support SMF, MMF and PMF.

Photocurrent Amplifier

Versatile photodiode amplifier to measure photocurrent in photonic integrated circuit (PIC) applications. Digital and analog measurement.

Photonic Doppler Velocimeter (PDV)

Purpose-built module for Photonic Doppler Velocimetry (PDV). A circulator, two VOAs and a passive coupler all built into one compact module.

Passive Component Integration

Integrate passive optical components of your choice such as WDM couplers, splitters, band-pass filters, PM beamsplitters and circulators. SMF, MMF and PMF.

Digital Sampling Oscilloscope (DSO)

Digital equivalent-time sampling oscilloscope (DSO) with high-quality precision timebase and low jitter mode, available in 1 or 2 channels in a compact benchtop instrument.

Clock Recovery Instrument (CDR)

Clock recovery instrument for the QCA Series. Low jitter design and precise phase-locking provide a reliable, scalable solution for high-speed communication testing.

Test.
Measure.
Solve.™

Quantifi Photonics provides test solutions to help customers unlock scalable and cost-effective high-volume manufacturing of photonic integrated circuits (PICs), co-packaged optics and pluggable optics. The company's portfolio includes a wide range of photonic test instruments, and digital sampling oscilloscopes, available as benchtop or the industry-standard PXI format to support cost-effective, high-throughput design verification testing and high-volume manufacturing.

To find out more, get in touch with us today.

General Enquiries	sales@quantifiphotonics.com
Technical Support	support@quantifiphotonics.com
Phone - NZ	+64 9 478 4849
Phone - USA	+1-800-803-8872

quantifiphotonics.com

QUANTIFI PHOTONICS®
A Teradyne Company

Quantifi Photonics Ltd © 2026. All rights reserved. No part of this publication may be reproduced, adapted, or translated in any form or by any means without the prior permission from Quantifi Photonics Ltd. All specifications are subject to change without notice. Please contact Quantifi Photonics for the latest information.